All Heaters
Part L2B Compliant

BENSON
HEATING

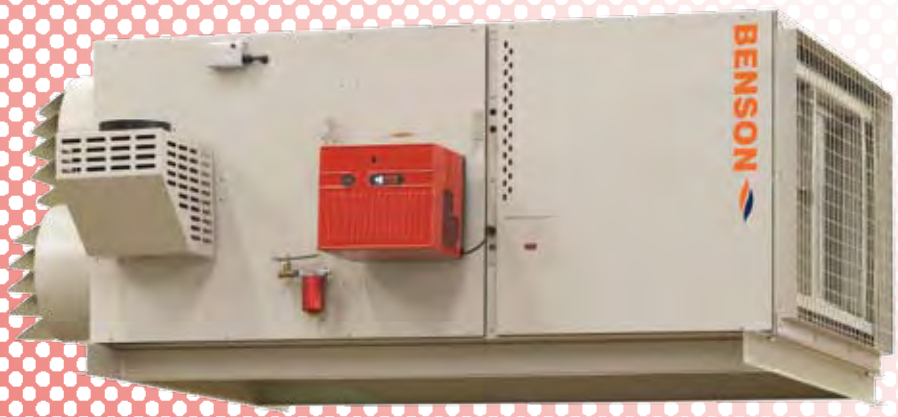

Technical Data –

Oil and Gas Cabinet Heaters
Vertical, Horizontal, Reverse Flow

For Models

VN/VD Vertical

HN/HD Horizontal

RN/RD Reverse Flow

Qualified for Energy Technology List
www.eca.gov.uk

Range & Configuration

Vertical Forced Draught Oil and Gas	29 kW to 381 kW
Horizontal Forced Draught Oil and Gas	58 kW to 381 kW
Reverse Flow Forced Draught Oil and Gas	58 kW to 381 kW

Specification

Cabinet: Machine punched and formed from electro-zinc coated steel to form a robust monocoque case construction and finished in a stove hardened, epoxy powder coat with a durable Kestrel Grey paint finish.

Combustion Chamber/Heat Exchanger: The combustion chamber/heat exchanger assembly has been designed to combine optimum thermal efficiency with extended service life. Manufactured from 304/316 stainless and HR4 steel each fabricated assembly comprises of a drum type combustion chamber coupled to a tubular heat exchanger.

Burner: All oil and gas fired cabinet heaters have been carefully matched with a fully automatic packaged pressure jet oil or forced draught gas burner. Oil fired cabinet heaters are complete with factory fitted fire valve and oil filter. Models 1200 and 1300 oil and 1300 gas are fitted as standard with high/low burners. High/low and modulating gas burners are available as an option for models 200 and above.

Efficiency: Each heater within the range has been designed and developed with fuel efficiency in mind and efficiencies exceed the mandatory requirements of CE legislation. Additionally for the United Kingdom market all heater efficiencies are compliant with the needs of Part L2B of the 2006 Building Regulations whilst most models within the range have also been rated to meet the criteria necessary for inclusion into the Enhanced Capital Allowance (ECA) scheme.

Fuel: Oil heaters are design to operate on Class D light distillate 'gas oil' having a maximum viscosity of 4.5 c.St at 20°C (35 sec Redwood at 100°F). Forced draught gas heaters can be specified to operate on either natural gas (G20) or Lpg Propane (G31). Most oil fired models can be operated on kerosene.

Fan: Air movement is provided by either a single or duplex forward curved blade dynamically balanced centrifugal fan assembly complete with double inlet rotors. Fans on models 100 - 300 are powered by integral motors whilst all others employ pulley and belt drive arrangements.

Air Distribution: Free blowing heaters are fitted with aerodynamic discharge nozzles each of which can be rotated through 360°. Each nozzle is fitted with adjustable horizontal louvre blades to provide lateral distribution. Models 250 and above include raised nozzles (one per three nozzled heater and two per four nozzled heaters) however for height sensitive applications lower standard nozzles can be specified. Heaters for ducted applications are supplied with a duct outlet spigot.

Generally return air to the heaters is via louvred inlet panels permitting air entry directly into the fan compartment. However heaters can, as an option, be fitted with alternative return air arrangements including fresh air spigots and filters.

Controls: Benson cabinet heaters are supplied ready for fully automatic operation and are complete with both safety and comfort controls. Each heater is fitted with a safety overheat thermostat as well as a time and temperature control system. Two alternative control options are available.

As standard, heaters are fitted with a digital time switch, mechanical day temperature and frost protection thermostats. Alternatively heaters may be specified with an optimised control that includes a secure entry code facility, an optimised digital time switch with override facility, electronic day thermostat and frost protection thermostat.
Unless otherwise specified the controls are factory fitted and pre-wired to all heaters except horizontal and reverse flow heaters where the controls are housed within a console for remote mounting. Inter-connecting wiring between heater and remote consoles is by others.
All heaters have the facility of 'fan only' operation for summer air movement.

Testing Approvals And Certification: Benson Heating is accredited with ISO 9001 quality assurance certification – certificate number FM14923. All gas fired heaters have been type tested by an independent notified body and conform to CE requirements. Each heater is inspected and test fired prior to despatch.

Guarantee: Benson cabinet heaters are provided with a comprehensive package of guarantees covering both the appliance and the combustion chamber/heat exchanger, which has the further benefit of an extended guarantee. For sales within the United Kingdom the guarantee includes a 'whole appliance' twelve months parts and labour guarantee supported by a further twelve months 'parts only' guarantee whilst the combustion chamber/heat exchanger assembly has a ten year time related warranty. For cabinet heaters supplied to overseas markets please refer to the relevant country documentation. All guarantees are subject to terms and conditions.

Specification

Vertical Heaters VN/VD Horizontal Heaters HN/HD Reverse Flow Heaters RN/RD

Model					100	125	150	200	250	300	400	500	600	700	800	1000	1200	1300
					Vertical Only			Vertical - Horizontal - Reverse Flow										
Output				kW	29	36	43	58	73	86	117	132	177	205	235	284	350	381
ECA Approved					✓	✓		✓	✓		✓	✓	✓		✓	✓	✓	
Airside Data	Airflow			m^3/s	0.61	0.71	0.71	1.03	1.39	1.39	2.15	2.65	3.11	3.40	4.32	4.86	6.88	6.88
	Nozzles	VN		no.	2	2	2	2	3	3	3	4	4	4	4	4	4	4
		HN/RN		no.	n/a	n/a	n/a	4	4	4	4	4	4	4	4	4	4	4
	Throw	VN		m	14	14	14	17	17	17	20	20	20	22	22	25	31	31
		HN/RN		m	n/a	n/a	n/a	16	22	22	22	23	22	23	23	25	31	31
	Fan Static	Standard		Pa	75	100	100	125	100	100	137	150	175	188	125	175	250	250
		Up-rated		Pa	n/a	n/a	n/a	n/a	n/a	n/a	175	200	225	225	188	225	n/a	n/a
Electrics	Standard			V/ph/hz	230/1/50						415/3/50							
	Optional			V/ph/hz	n/a			415/3/50			230/1/50		n/a					
Overall Dimensions	VN	Height		mm	1890	1980	1980	2230	2560	2560	2745	2745	2940	2940	3025	3025	3782	3782
		Width		mm	660	660	660	660	660	660	740	740	916	916	1100	1100	1244	1244
		Depth		mm	1011	1011	1011	1287	1287	1287	1517	1517	1895	1895	2130	2130	2130	2130
	HN	Height		mm	n/a	n/a	n/a	752	752	752	832	832	1008	1008	1192	1192	1336	1336
		Width		mm	n/a	n/a	n/a	2070	2070	2070	2263	2263	2458	2458	2441	2441	3032	3032
		Depth		mm	n/a	n/a	n/a	1403	1403	1403	1635	1635	2013	2013	2268	2268	2268	2268
Flue Diameter				mm ø	125	125	125	150	150	175	175	175	200	200	225	225	250	250
Combustion Air Spigot				mm ø	125	125	125	125	125	125	150	150	150	150	150	150	150	150
Noise Level				dBA	67	69	69	72	72	72	74	76	78	78	79	81	81	81
Nett Weight				kg	196	196	196	241	243	243	330	332	525	540	630	646	1090	1090

Note

Where heaters are selected for the UK Enhanced Capital Allowance (ECA) scheme then they must be specified with CP4 controllers

All models have efficiency levels which meet with the minimum efficiency requirements of UK Part L2B Building Regulations

Air handling data is assessed at room ambient conditions

Throw figures provide the distance to the point where the average air velocity is 0.25 m/s

Overall vertical heater height includes heads or extended heads where appropriate

Standard height heads can be specified where site height is restricted

Dimensions in table above refer to vertical and horizontal heaters only - for reverse flow heater dimensions refer to dimensions page

Combustion air spigot and connection not required when heater is used in 'flue only' configuration

Noise levels measured 3m from appliance.

Installation Standards: Benson oil and gas fired cabinet heaters must be installed and commissioned by a competent person and in accordance with Benson's installation and commissioning instructions, relevant local and national standards, Codes of Practice, and any requirements of Local Authorities, Fire Officer or insurers.

Siting: The position chosen for the heater will need to take account of the following points -

All heaters should be mounted on a flat non-combustible base capable of supporting the weight. Horizontal heaters can be base mounted on the skid frame provided or suspended from the mounting points provided on the lateral members of the skid frame. Reverse flow heaters are generally suspended on purpose brackets or drop-rods. Installers should ensure that brackets, fixing or other mounting points are structurally adequate.

Care should also be taken to ensure that the recommended clearances for maintenance, air discharge, return and re-circulation are observed.

Consideration should be given to the route and length of the flue, the provision and connection of oil, gas and electrical supplies, potential public access issues and protection from overhead cranes, fork lift trucks etc.

For effective warm air distribution free blowing 'nozzled' heaters should be selected and positioned to take account of the air 'throw' characteristics and sited such that the discharge avoids any immediate obstructions, partitions or other significant obstacles. In areas where it is proposed to install more than one heater then a general scheme of uniform air circulation should be employed to provide optimum distribution.

Generally, vertical heaters will be operated with in-built controls and temperature sensors which automatically monitor room air temperature. In applications where heaters are installed with remote controls then consideration should be given to ensure that the control and/or temperature sensors are located in a position which adequately reflects the working zone serviced by the heater. Sensors should not be located in areas subject to cold draughts.

In case of doubt relating to any aspect of heater or control siting please consult with Benson.

Oil & Gas Pipework: The oil and gas supply pipework should be sized and installed with due regard to all relevant standards and legislation, flow rates and the maximum/minimum inlet pressure requirements of both oil and gas fired heaters. Isolating gas cocks, oil line gate valves and service unions should be provided for each heater.

Special Risk Areas: Where it is proposed to install a heater within a special risk area (including but not limited to areas containing flammable vapours, where petrol engined vehicles are stored, parked or serviced, where paint spraying occurs or where wood working or other flammable dust creating process are employed) then restrictions, additional regulations and requirements concerning the heater installation may apply. Additionally areas containing chlorinated or halogenated hydrocarbons, degreasing solvents, styrene's, other laminating materials or airborne silicones can cause corrosion to combustion chambers and/or heat exchangers and It is strongly recommended that you consult Benson before installation commences. Failure to do so may invalidate or reduce guarantee cover.

Caution: When specified in certain configurations it may be possible to install heaters in areas containing flammable vapours, high levels of airborne dust, combustible dust, chlorinated or halogenated hydrocarbons, degreasing solvents, styrene's, other laminating materials or airborne silicones however before doing so we recommend that you consult Benson.

Plant Room/Enclosure Siting: Provided certain criteria are met it is possible to install a cabinet heaters within a plant room or enclosure. Where it is proposed to install a heater within such a location then the return air and discharge air arrangements must be such that they do not interfere with the operation of the flue or burner. Ideally both the warm air discharge and return air should be positively ducted to and from the heater.

Air Supply: Consideration for the provision of an air supply for combustion and appliance ventilation may be a mandatory requirement. For United Kingdom installations ventilation requirements vary according to heater location.

Where heaters are installed directly within the heated space (ie not in a plant room or enclosure) then combustion air or heater related ventilation air will generally not be required if the air change rate of the heated space is 0.5 air changes per hour or greater. Where the heated space has an air change rate of less than 0.5 air changes per hour then it will be necessary to provide either natural ventilation openings or mechanical ventilation.

Where heaters are installed within a plant room or enclosure then provision for both combustion air and air for general ventilation will be required by means of high and low level ventilation openings. Alternatively, the plant rooms or enclosures may be mechanically ventilated.

Flues: Each heater requires a separate flue of a diameter not less than that detailed in the data sections of this brochure. The minimum vertical length of the flue must not be less than 3 metres. Flue systems should ideally rise vertically from the heater and incorporate the minimum of bends and terminate with a suitable terminal.

The flue route and exit point needs to be selected carefully and it is recommended that the installer consult the installation and commissioning instructions before commencing installation.

Further Information: The foregoing is given for guidance purposes. More detailed information can be found within the relevant installation, commissioning and servicing instructions or alternatively contact Benson.

Installation Data

Vertical Heaters VN/VD Horizontal Heaters HN/HD Reverse Flow Heaters RN/RD

Model				100	125	150	200	250	300	400	500	600	700	800	1000	1200	1300
				Vertical Only			Vertical - Horizontal - Reverse Flow										
Fuel Connection	Oil		BSP/Rc	⅜	⅜	⅜	⅜	⅜	⅜	⅜	⅜	⅜	⅜	⅜	⅜	⅜	⅜
	Gas		BSP/Rc	½	½	½	½	½	½	¾	¾	1	1¼	1¼	1¼	1½	2
Minimum Gas Inlet Pressure		Nat Gas	mbar	17.5	17.5	17.5	17.5	17.5	17.5	17.5	17.5	17.5	17.5	17.5	17.5	17.5	17.5
		Lpg	mbar	37.0	37.0	37.0	37.0	37.0	37.0	37.0	37.0	37.0	37.0	37.0	37.0	37.0	37.0
Fuel Consumption		Oil	l/h	3.3	4.2	5.0	6.6	8.6	10.0	13.6	15.2	20.3	24.1	27.1	33.0	37.5	44.5
		Nat Gas	m^3/h	3.3	4.2	5.1	6.7	8.5	10.1	13.6	15.3	20.2	24.3	27.0	33.0	40.7	45.8
		Lpg	m^3/h	1.3	1.7	2.0	2.6	3.4	4.0	5.4	6.0	8.0	9.6	10.7	13.0	16.1	18.1
Electrics	230/1/50	Motor	kW	**0.55**	**0.55**	**0.55**	**0.99**	**0.99**	**0.99**	1.50	2.20	n/a	n/a	n/a	n/a	n/a	n/a
		FLC	amp	**3.2**	**4.8**	**4.8**	**6.0**	**7.2**	**7.2**	12.0	14.0	n/a	n/a	n/a	n/a	n/a	n/a
	415/3/50	Motor	kW	n/a	n/a	n/a	1.0	1.0	1.0	**1.5**	**2.2**	**3.0**	**3.0**	**4.0**	**5.5**	**7.5**	**7.5**
		FLC	amp	n/a	n/a	n/a	2.2	2.2	2.2	**3.6**	**5.2**	**6.5**	**6.5**	**8.4**	**11.0**	**17.0**	**17.0**
	415/3/50 Up-rated Fan	Motor	kW	n/a	n/a	n/a	n/a	n/a	n/a	2.2	3.0	4.0	4.0	5.5	7.5	11.0	11.0
		FLC	amp	n/a	n/a	n/a	n/a	n/a	n/a	5.2	6.5	8.4	8.4	11.0	14.0	24.0	24.0
Flue Diameter			mm ø	125	125	125	150	150	175	175	175	200	200	225	225	250	250
Combustion Air Spigot			mm ø	125	125	125	125	125	125	150	150	150	150	150	150	150	150
Installation Clearances	VN/VD	Front	mm	500	500	500	500	500	500	600	600	600	900	900	900	900	900
		Side	mm	150	150	150	150	150	150	150	150	150	150	400	400	500	500
		Rear	mm	700	700	700	1000	1000	1000	1200	1200	1500	1500	2000	2000	2000	2000
	HN/HD	Front	mm	n/a	n/a	n/a	500	500	500	600	600	600	900	900	900	900	900
		Top/Bottom	mm	n/a	n/a	n/a	150	150	150	150	150	150	150	400	400	500	500
		Rear	mm	n/a	n/a	n/a	1000	1000	1000	1200	1200	1500	1500	2000	2000	2000	2000
Nett Weight			kg	196	196	196	241	243	243	330	332	525	540	630	646	1090	1090

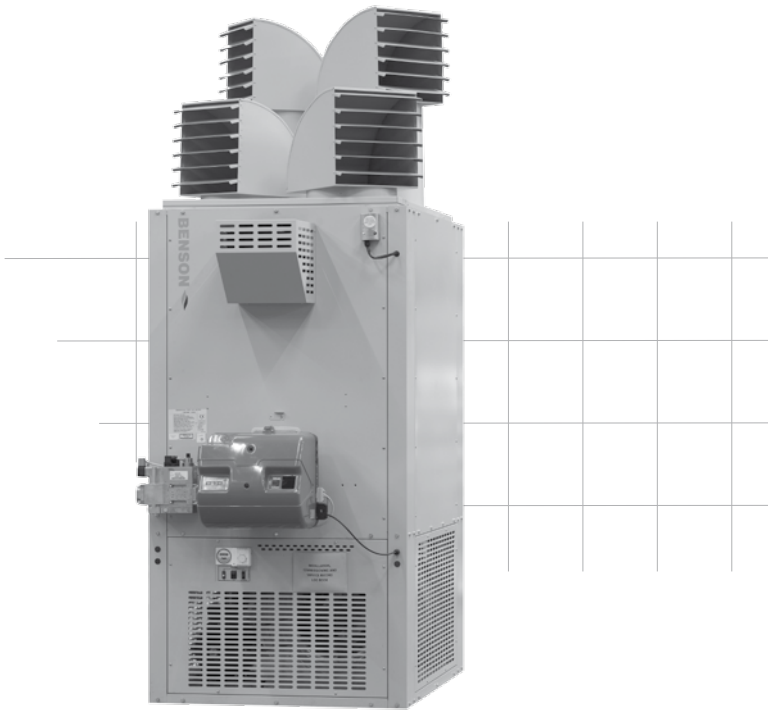

Note

Fuel consumption and output figures based upon gross calorific values as -

Class D light distillate fuel oil @ 37.9 MJ/l

Natural gas (G20) @ 37.78 MJ/m3

Lpg Propane (G31)@ 95.65 MJ/m3

Electrics details in bold refer to standard configurations, other configurations optional

Clearances refer to heaters with standard fresh/return air louvre arrangements

For clearances relating to RN/RD heaters refer to relevant installation and operation manual

Models 1200 ducted and 1300 ducted (VD/HD/RD) have an up-rated fan motor as standard

Air Discharge and Inlet Details

Vertical Heaters VN/VD

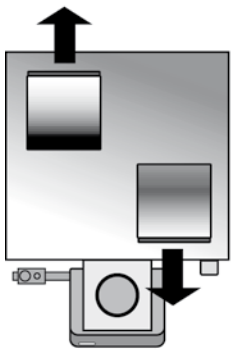

Head Plan 1

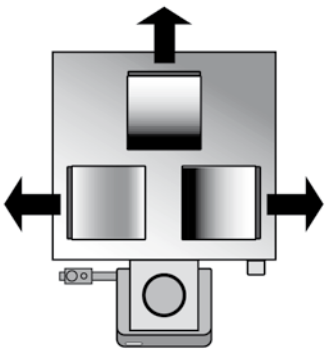

Head Plan 2

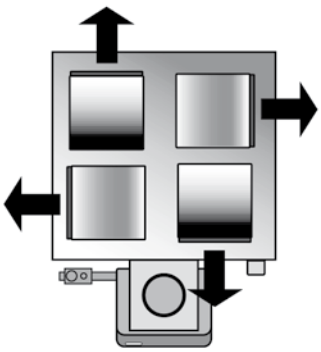

Head Plan 3

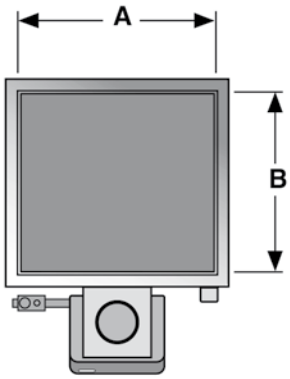

Outlet Spigot

Return Air Spigots and Filters

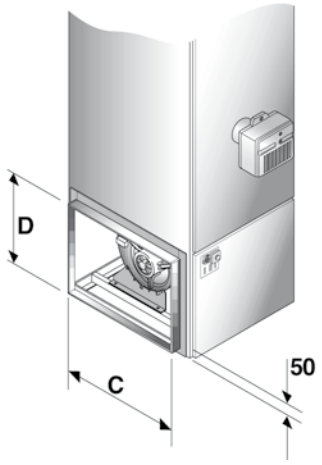

Side Inlet Spigot

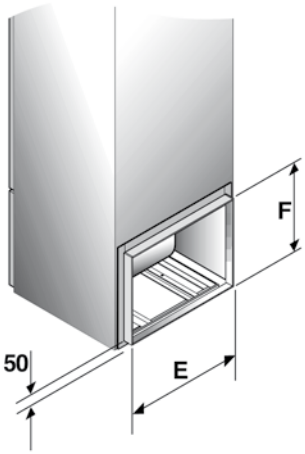

Rear Inlet Spigot

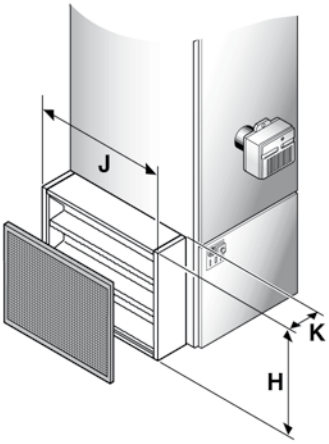

Side Filter

Model				100	125	150	200	250	300	400	500	600	700	800	1000	1200	1300
Head Plan	VN		mm	1	1	1	1	2	2	2	3	3	3	3	3	3	3
Nozzle Detail	VN	no.	mm	2	2	2	2	3	3	3	4	4	4	4	4	4	4
		Spigot	mm ø	240	240	240	240	240	240	280	280	320	320	370	370	470	470
Outlet Spigot	VD	A	mm	570	570	570	634	634	634	714	714	890	890	1000	1000	1086	1086
		B	mm	570	570	570	770	770	770	950	950	1120	1120	1450	1450	1365	1365
Side Inlet Spigot	All	C	mm	522	522	522	702	702	702	904	904	1078	1078	1145	1145	1150	1150
		D	mm	348	348	348	427	427	427	542	542	692	692	654	654	796	796
Rear Inlet Spigot	All	E	mm	620	620	620	520	520	520	608	608	790	790	935	935	n/a	n/a
		F	mm	445	445	445	550	550	550	550	550	560	560	654	654	n/a	n/a
Inlet Filter Assembly	VN/VD	H	mm	420	420	420	600	600	600	680	680	765	765	720	720	860	860
		J	mm	660	660	660	800	800	800	990	990	1165	1165	1245	1245	1530	1530
		K	mm	300	300	300	300	300	300	300	300	300	300	450	450	450	450

Notes

Side inlet spigots and filter assemblies require to be specified either left hand or right hand side

Filter assemblies can be side mounted only

Air Discharge and Inlet Details

Horizontal Heaters HN/HD Reverse Flow Heaters RN/RD

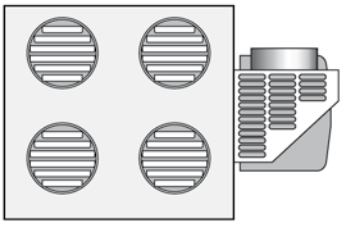

Head Plan 1

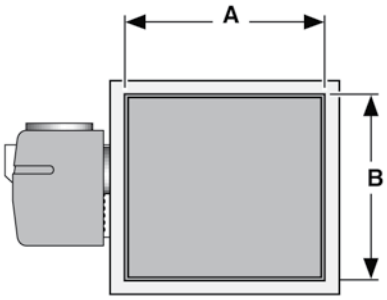

Inlet Spigot

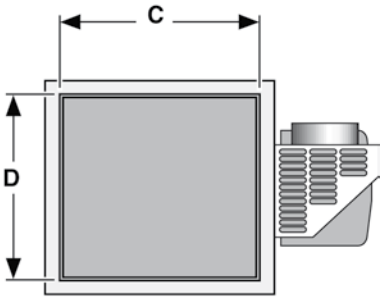

Outlet Spigot

Return Air Spigots

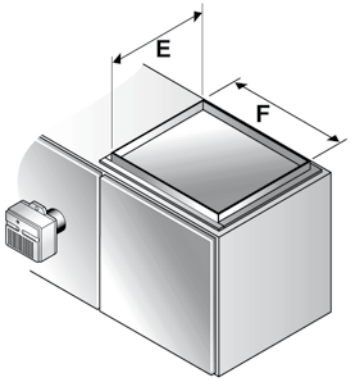

Top
Inlet Spigot

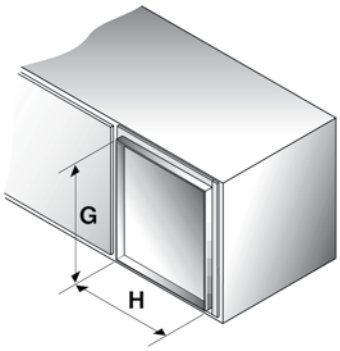

Rear
Inlet Spigot

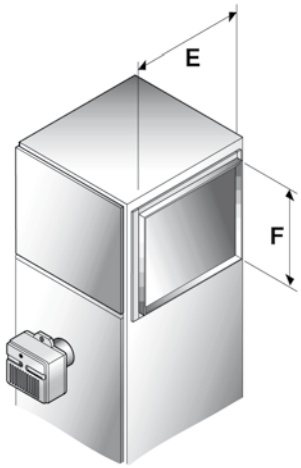

Side
Inlet Spigot

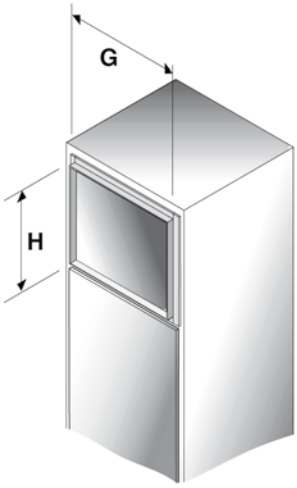

Rear
Inlet Spigot

Model				200	250	300	400	500	600	700	800	1000	1200	1300
Head Plan	HN/RN		mm	1	1	1	1	1	1	1	1	1	1	1
Nozzle Detail	HN/RN	no.	mm	4	4	4	4	4	4	4	4	4	4	4
		Spigot	mm ø	203	203	203	284	284	419	419	419	419	470	470
Inlet Spigot	All	A	mm	790	790	790	952	952	1182	1182	1450	1450	1365	1365
		B	mm	560	560	560	640	640	816	816	1000	1000	1086	1086
Outlet Spigot	HD/RD	C	mm	790	790	790	952	952	1182	1182	1450	1450	1365	1365
		D	mm	560	560	560	640	640	816	816	1000	1000	1086	1086
Top Inlet Spigot	HN/HD	E	mm	702	702	702	904	904	1078	1078	1145	1145	1150	1150
		F	mm	427	427	427	542	542	692	692	654	654	796	796
Rear Inlet Spigot	HN/HD	G	mm	520	520	520	608	608	790	790	935	935	n/a	n/a
		H	mm	550	550	550	550	550	560	560	654	654	n/a	n/a
Side Inlet Spigot	RN/RD	E	mm	702	702	702	904	904	1078	1078	1145	1145	1150	1150
		F	mm	427	427	427	542	542	692	692	654	654	796	796
Rear Inlet Spigot	RN/RD	G	mm	520	520	520	608	608	790	790	935	935	n/a	n/a
		H	mm	550	550	550	550	550	560	560	654	654	n/a	n/a

Notes

Side inlet spigots require to be specified either left hand or right hand side

Filter details for horizontal or reverse flow heaters available on request

Dimensions

Vertical Heaters VN/VD

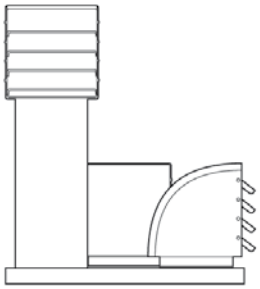

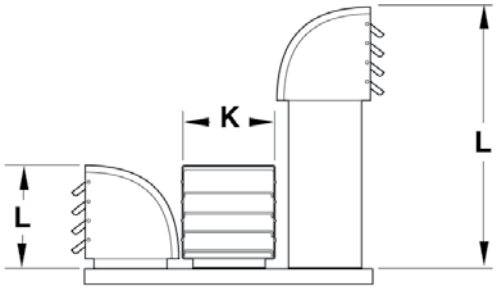

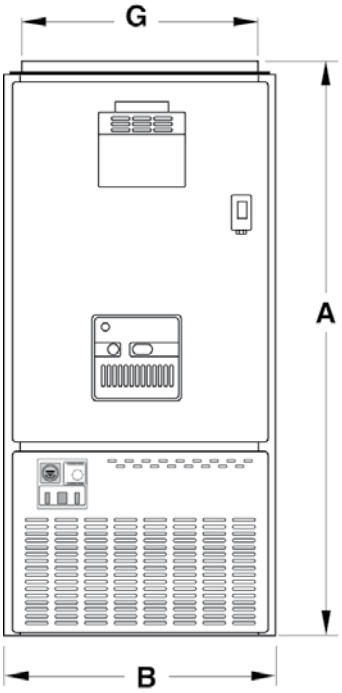

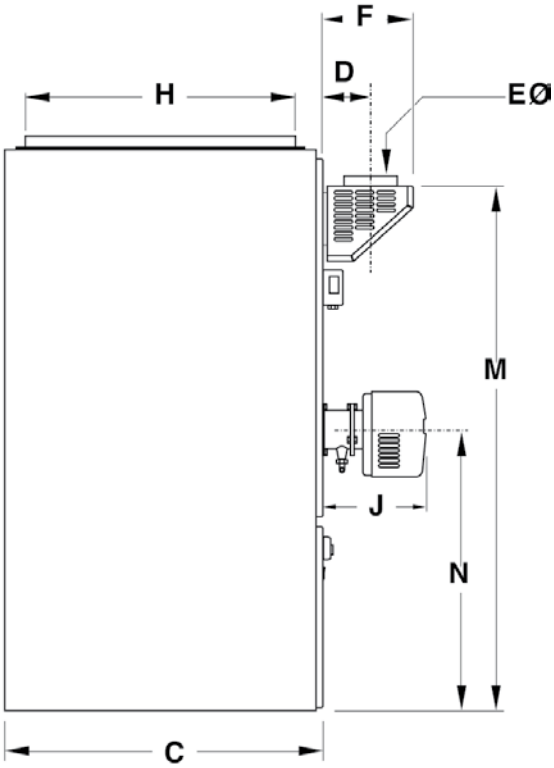

Model			100	125	150	200	250	300	400	500	600	700	800	1000	1200	1300
A	All	mm	1650	1650	1650	1900	1900	1900	2025	2025	2125	2125	2110	2110	2667	2667
B	All	mm	660	660	660	660	660	660	740	740	916	916	1100	1100	1244	1244
C	All	mm	662	662	662	925	925	925	1085	1085	1315	1315	1550	1550	1550	1550
D	All	mm	95	95	95	170	170	170	170	170	195	195	195	195	203	203
E	All	mm ø	125	125	125	150	150	175	175	175	200	200	225	225	250	250
F	All	mm	250	250	250	320	320	320	320	320	380	380	380	380	355	355
G	All	mm	570	570	570	634	634	634	714	714	890	890	1000	1000	1086	1086
H	All	mm	570	570	570	770	770	770	950	950	1120	1120	1450	1450	1365	1365
J	Oil	mm	229	229	229	267	267	267	298	298	298	476	476	476	476	476
	Gas	mm	349	349	349	362	362	362	432	432	432	580	580	580	580	580
K	All	mm	280	280	280	280	280	280	305	305	355	355	406	406	474	474
L	Standard	mm	240	330	330	330	330	330	360	360	410	410	460	460	613	613
	Extended	mm	n/a	n/a	n/a	n/a	660	660	720	720	815	815	915	915	1115	1115
M	All	mm	1500	1500	1500	1778	1778	1778	1878	1878	1980	1980	1965	1965	2610	2610
N	All	mm	835	835	835	984	984	984	968	968	1068	1068	1054	1054	1372	1372

Dimensions

Horizontal Heaters HN/HD

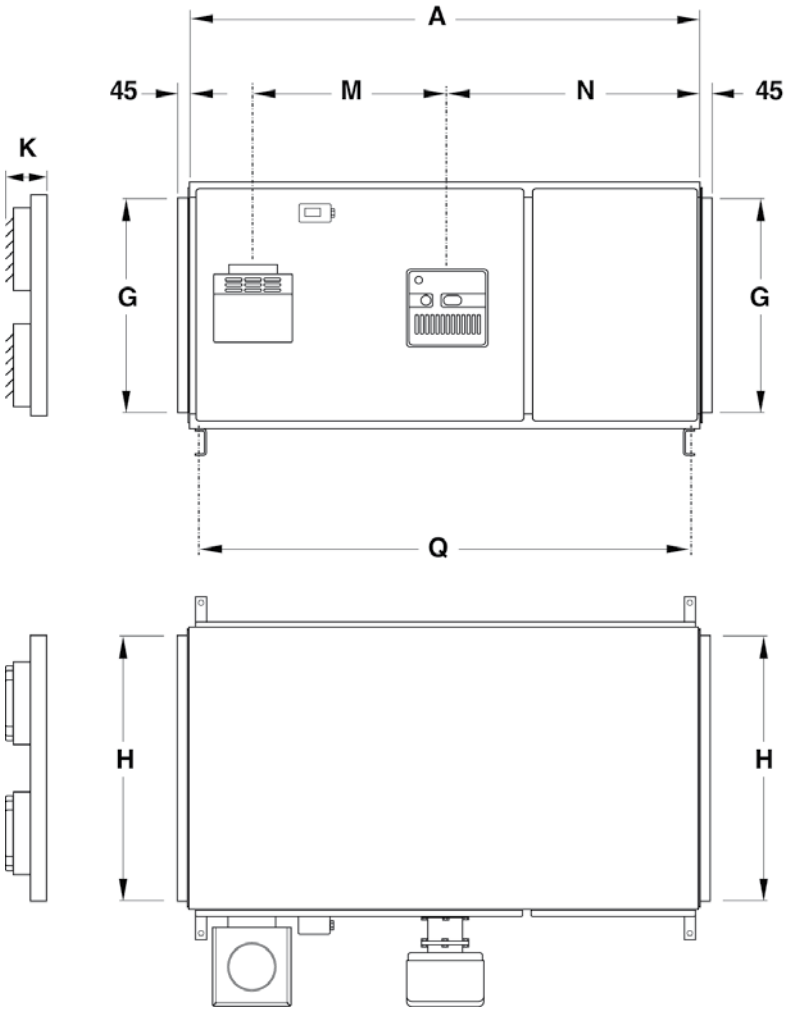

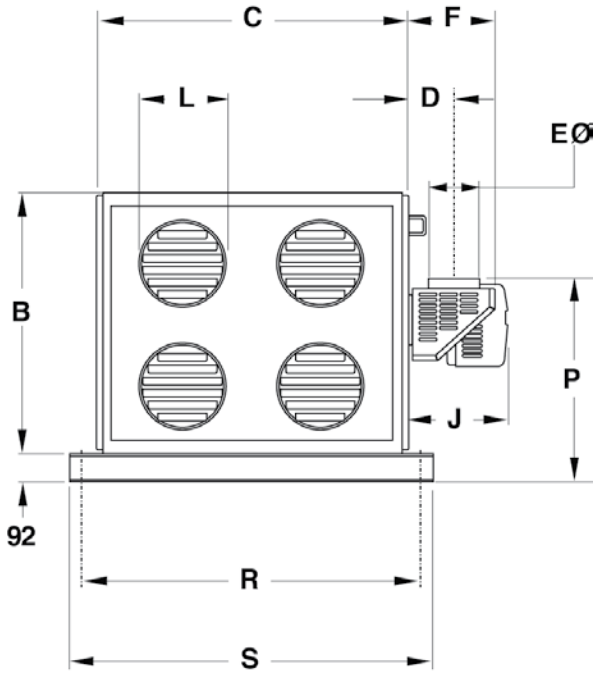

Note
Heater shown is with airflow right to left.
Left to right airflow optional - to be specified at time of order.

Model			200	250	300	400	500	600	700	800	1000	1200	1300
A	All	mm	1865	1865	1865	1993	1993	2093	2093	2076	2076	2667	2667
B	All	mm	660	660	660	740	740	916	916	1100	1100	1244	1244
C	All	mm	925	925	925	1085	1085	1315	1315	1550	1550	1550	1550
D	All	mm	170	170	170	170	170	200	200	225	225	203	203
E	All	mm ø	150	150	175	175	175	200	200	225	225	250	250
F	All	mm	320	320	320	320	320	380	380	380	380	355	355
G	All	mm	560	560	560	640	640	816	816	1000	1000	1086	1086
H	All	mm	790	790	790	952	952	1182	1182	1450	1450	1365	1365
J	Oil	mm	267	267	267	298	298	298	476	476	476	476	476
	Gas	mm	362	362	362	432	432	432	580	580	580	580	580
K	All	mm	160	160	160	225	225	320	320	320	320	320	320
L	All	mm ø	209	209	209	290	290	425	425	425	425	480	480
M	All	mm	676	676	676	790	790	790	790	769	769	1054	1054
N	All	mm	984	984	984	968	968	1068	1068	1054	1054	1372	1372
P	All	mm	568	568	568	607	607	740	740	840	840	1396	1396
Q	All	mm	1806	1806	1806	1934	1934	2034	2034	1475	1475	2612	2612
R	All	mm	1081	1081	1081	1244	1244	1474	1474	1750	1750	1750	1750
S	All	mm	1157	1157	1157	1320	1320	1550	1550	1826	1826	1826	1826

Dimensions

Horizontal Heaters RN/RD

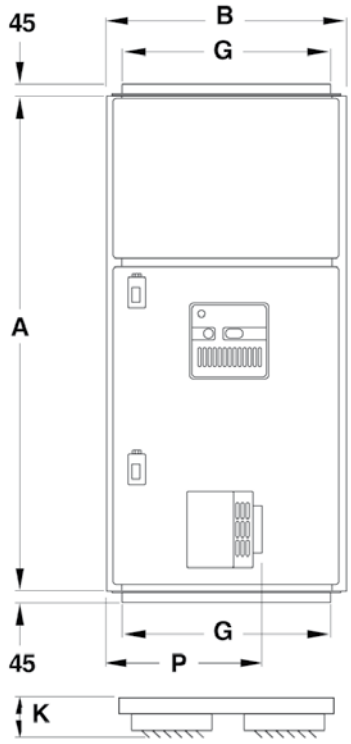

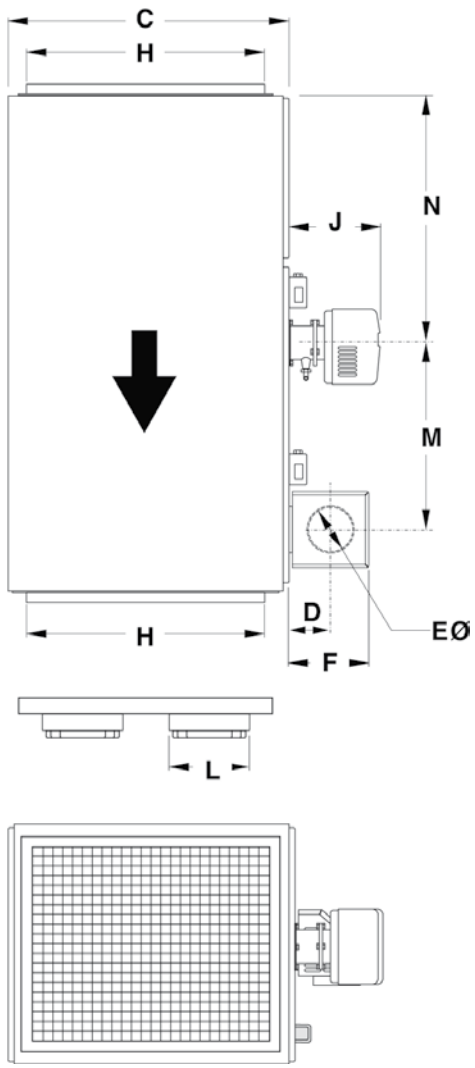

Model			200	250	300	400	500	600	700	800	1000	1200	1300
A	All	mm	1865	1865	1865	1993	1993	2093	2093	2076	2076	2667	2667
B	All	mm	660	660	660	740	740	916	916	1100	1100	1244	1244
C	All	mm	925	925	925	1085	1085	1315	1315	1550	1550	1550	1550
D	All	mm	170	170	170	170	170	200	200	225	225	203	203
E	All	mm ø	150	150	175	175	175	200	200	225	225	250	250
F	All	mm	320	320	320	320	320	380	380	380	380	355	355
G	All	mm	560	560	560	640	640	816	816	1000	1000	1086	1086
H	All	mm	790	790	790	952	952	1182	1182	1450	1450	1365	1365
J	Oil	mm	267	267	267	298	298	298	476	476	476	476	476
	Gas	mm	362	362	362	432	432	432	580	580	580	580	580
K	All	mm	160	160	160	225	225	320	320	320	320	320	320
L	All	mm	209	209	209	290	290	425	425	425	425	480	480
M	All	mm	676	676	676	790	790	790	790	769	769	1054	1054
N	All	mm	984	984	984	968	968	1068	1068	1054	1054	1372	1372
P	All	mm	476	476	476	515	515	648	648	748	748	1304	1304

Side/Rear Inlet Duct Spigot & Filter Details

Vertical Heaters VN/VD

Inlet Duct Spigot

- To order a side mounted spigot ask for 'Side Inlet Duct Spigot' and specify required side
- To order a rear mounted spigot ask for 'Rear Inlet Duct Spigot' (not avaialable on models 1200 & 1300)

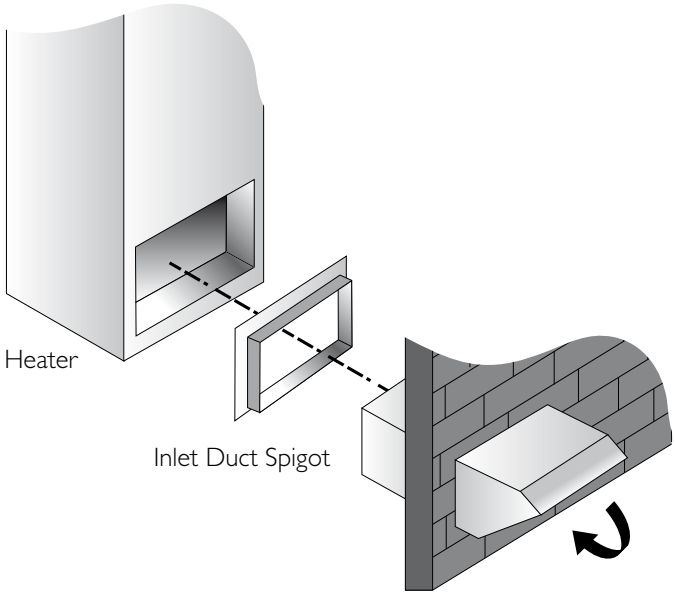

Side Mounted Filter Detail

- To order ask for 'Side Inlet Filter' and specify required side

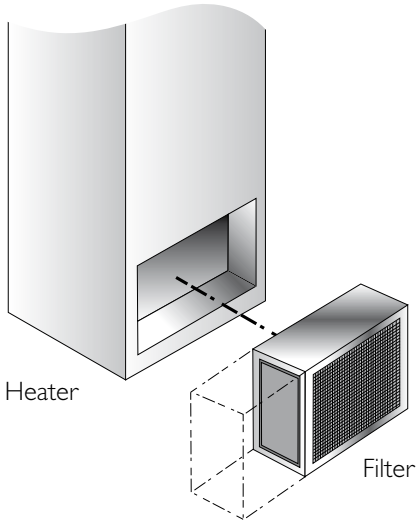

Notes

Filter cassette can be withdrawn from either side

Ensure that there is adequate site clearance for cassette withdrawall

Clearance required = width of filter assembly (see dimensions pages)

Filter can be specified either left or right hand side of heater but not rear

Side Mounted 'In-line' Filter Detail

- To order ask for 'Side Inlet Filter' and 'Side Inlet Duct Spigot' and then specify required side

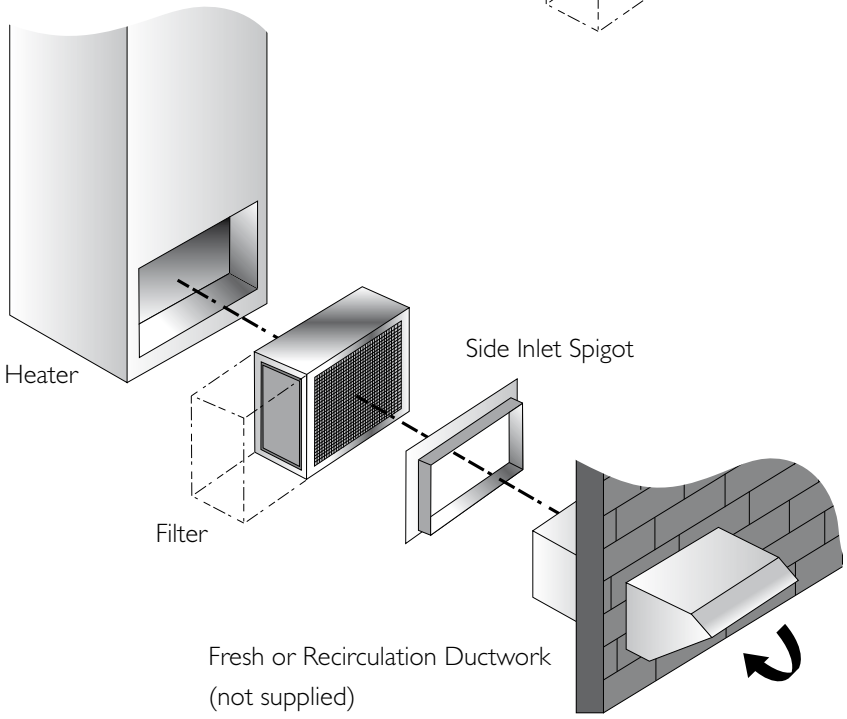

www.bensonheating.com

BENSON
HEATING

Ludlow Road
Knighton
Powys
LD7 1LP

Telephone (main) + 44 (0)1547 528534
Facsimile (main) + 44 (0)1547 520399
Telephone (sales) + 44 (0)1547 529245
Facsimile (sales) + 44 (0)1547 529195
e.mail information@bensonheating.co.uk
sales@bensonheating.co.uk
exportsales@bensonheating.co.uk

Guarantees and warranties subject to terms and conditions. It is the policy of Benson Heating to pursue a programme of continuous development. We therefore reserve the right to change models, types, specifications and prices without prior notice. Details are believed to be correct but do not form the basis of any contract or guarantee. All orders accepted subject to our standard Conditions of Sale, copy available on request.

November 2007